PHYS 2211- Conservation of Energy

Reading Day Review

Problem 1

A NASA satellite has just observed an asteroid that is on a collision course with the Earth. The asteroid has an estimated mass, based on its size, of 5×10^9 kg. It is approaching the Earth on a head-on course with a velocity of 660 m/s relative to the Earth and is now 5.0×10^9 km away.

a) With what speed will it hit the Earth's surface, neglecting friction with the atmosphere?
b) What is the escape velocity needed to leave from the surface of the asteroid while it is still in space? Assume the asteroid is spherical and has a density of 5.32 g/cm^3.

Problem 2

Two masses, m_1 and m_2, are suspended by two springs with stiffnesses k_1 and k_2 as shown below.

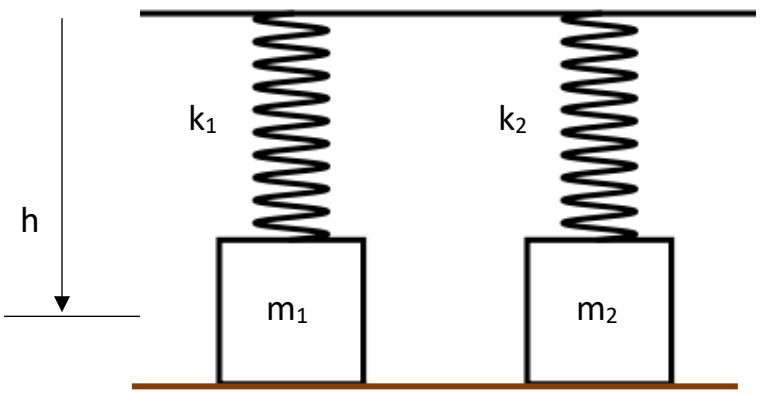

Initially the masses are held at rest a distance h from the ceiling. Spring 1 is in equilibrium, but spring 2 is compressed an unknown distance x_2. After being released, the masses oscillate and experience no drag.

a) What is the maximum speed achieved by m_1?

b) If the maximum extension of m_2 is 3 times that of m_1, express x_2 in terms of the given variables and constants.

c) Explain how the relative size of the masses (i.e. the ratio between m_1 and m_2) limits the range of the possible values for k_1 and k_2 under the conditions of part (b).

Problem 3

A car begins at the bottom of a hill with an initial velocity of 7.0 m/s and the maximum height of the hill is 20 m as shown in the figure below. It has a mass of 500 kg.

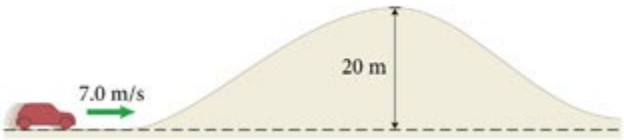

a) On its first approach, the car coasts up the hill with the motor off. Assuming the wheels do not slip, will the car make it to the top of the hill? If it doesn't reach the top, what is the maximum height achieved?

b) The next time the motor is on and it provide just enough power to reach the top of the hill with zero velocity. What is the work done by the motor?

c) Now assume there are frictional losses due to drag. If the motor provides 100 kJ of energy during the ascent, to maintain a speed of 7 m/s at the peak, what is the work done by drag?

d) Now assume the force provided by the engine is constant, F = 5 kN while ascending. Also assume the hill can be modeled as a ramp with a 45-degree incline. Find the work done by the engine to reach the top of the hill with a speed of 5 m/s. Ignore drag. (Hint: This isn't only conservation of energy problem.)